RESEARCH REPORT

Team communication processing and analysis in human-factors simulated environment

By Juanita Cathy

Note: This document is my personal technical research and exploration of different approaches, methods and comparisons relevant to the project before starting the actual proposal. It is **not** a proposal and is intended to be a v0 document of the project direction and demonstrate the reasoning behind the finally selected approach. There's no code details in this yet.

Table of Contents

1.	Introduction
2.	Understanding the Problem
3.	Data Sources & Evaluation (Quantitative Results of TASK 1)
4.	Preprocessing Methods
5.	Audio Enhancement (Hybrid-Approach)
	5.1 DSP Methods and Enhancement (TASK 2)
	5.2 Deep Learning Methods
	5.3 Comparative Analysis
	5.4 Final Choice Reason
6.	Downstream Evaluation & NLP Probes
7.	Evaluation Metrics (TASK 2)
8.	Final project Pipeline Decision
9.	Conclusion

Introduction:

Our goal here is to build a generalized python-based 'tool' for processing, enhancing, and analyzing multi-speaker team communication audio from simulated environments. This is so as to enable improved research on group coordination, distraction, performance and other such parameters.

So what are the asks here?

1. We have to identify the different multi-speaker datasets that have open access as proxies for headset communications.
2. Build and compare enhancement methods that improve perceptual quality and analytical utility.
3. Perform and show the evaluations, metrics to demonstrate effectiveness.

What is the problem?

So currently, stimulated team communication data suffers from a range of issues such as: Stationary noise (fan, headset hiss), Non-stationary noise, Reverberation (basically the room acoustics), Overlapping speech.

These are '**distortions**' and they degrade a bunch of areas like:

- ➢ Human understanding
- ➢ Automatic Speech Recognition performance,
- ➢ Speaker Diarization Reliability
- ➢ communication analytics (like turn-taking, interruptions).

So yeah, we need to create a pipeline that tackles this by improving the raw audio such that BOTH **signal quality** and **downstream analytical results** benefit.

My Relevant Experience (detailed info: link, github)

- ➢ **Speech & Audio ML Research Intern (SER preprint):** Worked on Speech Emotion Recognition using deep learning models on noisy, real-world speech data. This involved audio preprocessing pipelines (resampling, normalization, segmentation) and metric-driven evaluation.
- ➢ **AI Engineering Intern at C1X Inc:**Built multi-agent AI systems with orchestration layers for task routing, tool use, and result aggregation and also productionized ML services.
- ➢ **Open Source Endeavor (not limited to ML):** Daytona, AOSSIE/Resonate, Seam, ACMW

1. Datasets: Comparison of AMI, ICSI, LibriCSS and Selection

We have to identify open-access audio corpora that best approximate the characteristics of team communication in simulated environments used by the TRIP Laboratory. Since TRIP studies involve multi-participant communication via headsets in task-oriented settings, we want to look for datasets that exhibits:

- natural turn-taking and overlap
- background noise and reverberation
- headset or headset-like microphone characteristics
- time-aligned annotations for downstream evaluation
- multi-speaker interaction

We will consider 3 datasets and these are PROXIES for our actual TRIP simulator: AMI Corpus, ICSI Meeting Audio and LibriCSS

Dataset	Hours	My brief understanding (we can evaluate deeper with some criteria later on..)
AMI Meeting Corpus (link)	~100 Hours	4-person meetings far-field + close-talk headset microphones It includes transcripts, diarization, overlap annotations (16 kHz)
ICSI Meeting Corpus	~75 hours	5–15 participants; table microphones; transcripts + VAD
LibriCSS	~15 hours	10-speaker circular arrays; heavy overlap; clean transcripts

Based on the initial observations, AMI Meeting Corpus has the closest match to headset-based team communication in terms of interaction structure, overlap patterns, and microphone setup.

1.1 Dataset Evaluation Criteria (Quantitative Results from Task 1)

Exploratory analysis on the data confirmed the following:

- **Noise floor:** 4.4× higher in array vs headset channel
- **Array VAD activity:** 76.8% (realistic meeting speech: 40–60%) inflated by noise misclassification
- **Overlap proxy**: 25.8% of frames show high acoustic complexity
- **Spectrogram:** blurred harmonics and elevated broadband noise in array vs sharp harmonic structure in headset.

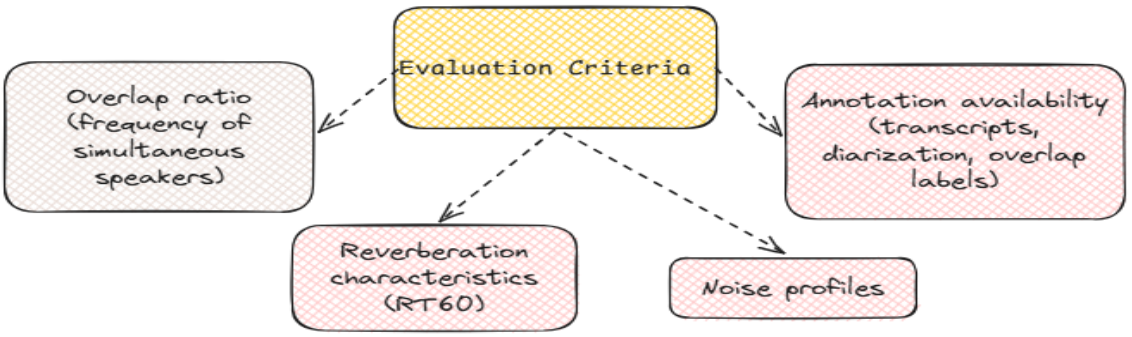

These measurements validate AMI as the dataset choice, the degradations are present, quantifiable, and directly relevant to the enhancement pipeline.

2. Preprocessing Methods:

We need to preprocess the audio before enhancement. For this, I referred to this really understandable and clear blog. https://www.geeksforgeeks.org/data-analysis/preprocessing-the-audio-dataset/

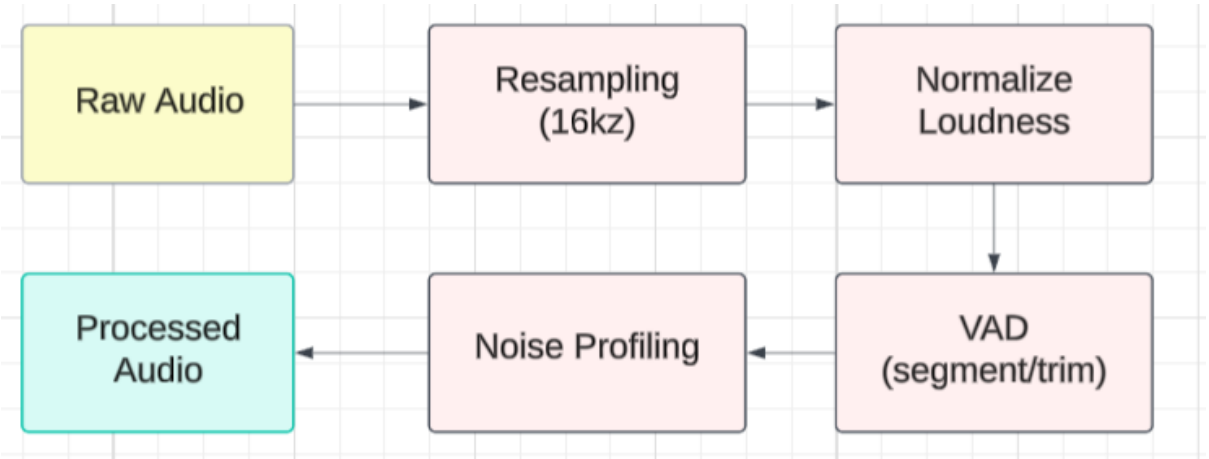

1. First, we standardize the audio via ***resampling*** to 16 kHz and loudness normalization (*classic RMS*) to reduce variance across recordings.
2. ***Voice Activity Detection*** **(VAD)** is used to remove long silences and segment audio into analyzable units. We will use "*WebRTC VAD*".
3. A lightweight ***noise profiling*** step will support our DSP-based enhancement methods which I have detailed in the next section.
4. This is just classical audio preprocessing to ensure consistent inputs for our enhancement models and for stable evaluation metrics.

Audio Enhancement Engine (Hybrid Approach DSP-DP):

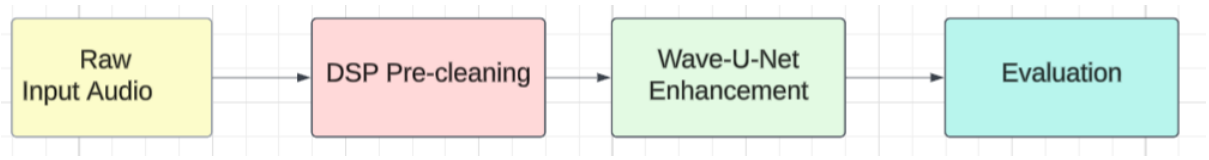

We selected a **hybrid enhancement pipeline** combining classical DSP pre-cleaning with a deep learning-based waveform enhancement model.

1. DEEP LEARNING ENHANCEMENT PHASE:
Considered approaches include **Wave-U-Net, MetricGAN, SepFormer.**

WAVE-U-NET:
The paper referred to for Wav-U-Net:
https://arxiv.org/abs/1806.03185

Wave-U-Net operates **directly on raw waveforms** using a U-Net-style encoder–decoder architecture with skip connections.

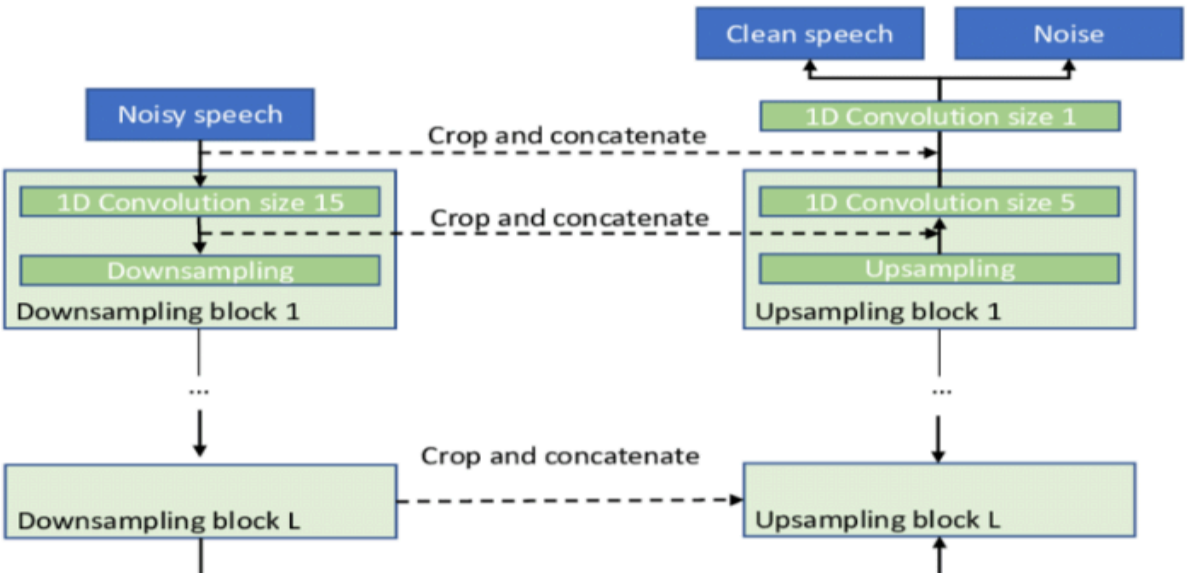

Internal Architecture:

- **Encoder:**
  - 1D convolutional layers progressively downsample the waveform
  - Captures local temporal patterns (phoneme onsets, boundaries)
- **Bottleneck:**
  - Aggregates multi-scale temporal context
- **Decoder:**
  - Upsampling layers and Skip connection preserve temporal details

This figure illustrates the Wave-U-Net architecture used in this project. Unlike spectrogram-based methods like MetricGAN, Wave-U-Net operates directly on raw waveforms using an encoder–decoder with skip connections. This preserves **temporal microstructure** and **speaker boundary cues**, which are important for downstream team communication.

2. DSP PRE-CLEANING and ENHANCEMENT PHASE (TASK 2)

Four DSP methods were implemented and benchmarked:

1. **Spectral Subtraction:** classical baseline, estimates noise from lead-in silence, subtracts from each frame

2. **Wiener Filter:** statistically optimal linear filter, SNR-based gain per frequency bin

3. **MMSE-LSA:** Log-Spectral Amplitude estimator, minimises perceptual error in log domain, less musical noise than Wiener

4. **Multi-band Wiener:** frequency-adaptive Wiener across 5 perceptual bands with different suppression floors per band: Sub-speech (<150 Hz), Low speech (150–500 Hz), Mid speech (500 Hz–2 kHz), High speech (2–4 kHz), Presence (4–8 kHz)

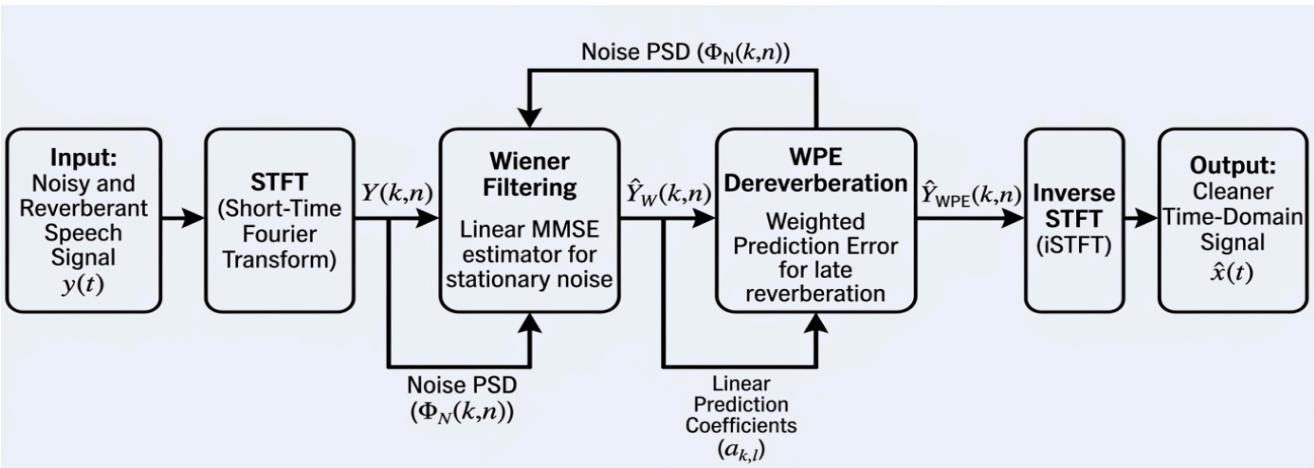

FINAL SELECTION:
Our project *does* not require source separation, it requires enhancement of the mixed signal for improved analysis.

Why Wave-U-Net over MetricGAN+:

- Wave-U-Net operates on **raw waveforms**, preserving temporal boundaries important for:
    - Turn-taking
    - Overlap analysis
    - Diarization stability
    - ASR word boundary clarity
- MetricGAN+ optimizes perceptual metrics on mostly **single-speaker noise benchmarks**, but:
    - Operates in STFT domain
    - Can introduce phase reconstruction artifacts
    - Shows weaker robustness on overlapping multi-speaker meeting audio
- For human-factors analysis, **temporal structure > small gains**

Why not SepFormer:

- SepFormer is designed for **source separation** (splitting speakers into isolated streams)
- Our scope requires enhancement of the mixed signal, not speaker isolation

Hence, ***Wave-U-Net*** is selected as the primary ***DL enhancer***, with DSP pre-cleaning with Wiener and WPE forming a hybrid pipeline.

Downstream Evaluation & NLP Probes:

Why is downstream evaluation needed?
Audio metrics quantify perceptual quality, but since our goal is about **team communication analysis** (coordination, turn-taking, distraction), enhancement quality will also be evaluated by its impact on downstream speech understanding and interaction signals.

ASR as an NLP probe:

We won't build ASR but rather Automatic Speech Recognition will be used purely as a *probe* to quantify intelligibility improvements:

- Run ASR on **raw audio**
- Run ASR on **enhanced audio**
- We can then compare:
  - Word Error Rate (WER)
  - word boundary stability (timing alignment)
  - utterance segmentation quality

<u>Turn-taking & overlap signals:</u>

From ASR + timestamps:

- Turn-taking frequency
- Overlap ratio (simultaneous speech)
- Silence ratio
- Interruption count

These interaction signals are extracted as **objective proxies** that become more stable after enhancement, demonstrating actual value to team communication research.

Evaluation Metrics:

Now, we want to have both SIGNAL QUALITY and ANALYTIC UTILITY. This combination we can achieve by using 2 metric branches.

Communication Quality Index (CQI):

To support rapid comparison across enhancement methods, we define a lightweight composite score:

CQI = 0.50 × SQUIM_norm + 0.30 × STOI_norm + 0.20 × (1-WER)_norm

1. SQUIM (Speech Quality and Intelligibility Measures) is a reference-free neural quality estimator, it predicts STOI, PESQ and SI-SDR from the signal alone using a model trained on large-scale listening tests. No reference mic needed.

2. WER weighted at 20% for DSP-only pipelines: DSP spectral artefacts confuse lightweight ASR models (Whisper tiny). WER regains full weight at Wave-U-Net stage where artefacts are eliminated.

3. DER retained the full pipeline formula for the Wave-U-Net evaluation stage.

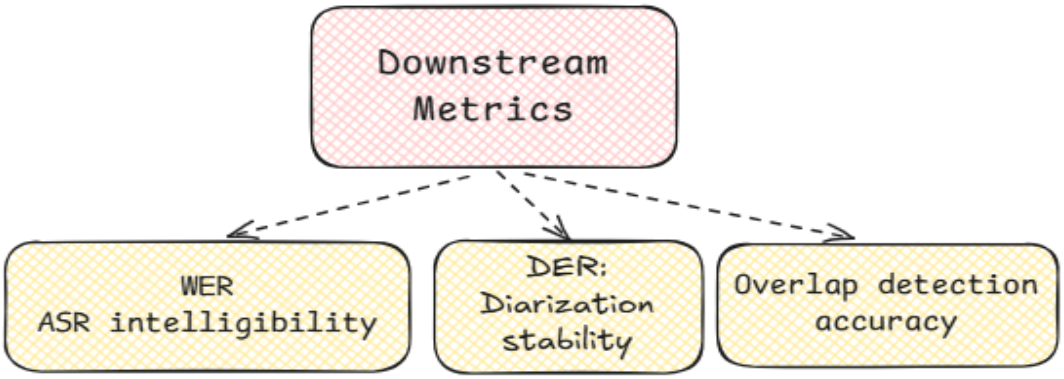

8. Pipeline Decision (Based on Task 2 Evaluation)

Based on implementation and benchmarking of five enhancement methods, the full proposed project pipeline is:

Stage 1 High-Pass Filter (80 Hz)

- ➔ Removes sub-speech rumble

Stage 2 Multi-band Wiener Filter ← DSP pre-cleaning

- ➔ SQUIM-STOI 0.947, SI-SDR 11.3 dB, CQI +0.3562
- ➔ VAD normalised 76.8% → 60.6%
- ➔ Frequency-adaptive suppression protects
- ➔ intelligibility-critical mid-band (500 Hz–2 kHz)

Stage 3 Wave-U-Net ← DL enhancement

- ➔ Trained on AMI array/headset pairs
- ➔ Handles non-stationary noise, reverberation,
- ➔ overlapping speech, beyond DSP ceiling

Stage 4 Peak Normalisation

Stage 5 Evaluation

- ➔ SQUIM · STOI · WER · CQI
- ➔ Same framework as Task 2 so its directly comparable
- ➔ DSP baseline CQI +0.3562 is the benchmark to beat

Why this combination:

Multi-band Wiener removes stationary noise efficiently before the neural model, so Wave-U-Net focuses its capacity on the hard problems DSP cannot solve: non-stationary noise, reverberation, and overlapping speech. This is the hybrid DSP+DL approach defined now with the specific DSP method confirmed by empirical evaluation.

Overall Tool Design:

The tool system will be implemented as a modular Python backend. Initially, we will have an interactive ***UI*** in streamlit for rapid experimentation and visualization by TRIP Lab researchers but during the scope of the project, develop it into a lightweight ***command-line interface*** for reproducible batch evaluation on datasets.

sO our tool will be designed to expose a plugin interface to allow **TRIP researchers** to plug in new datasets, enhancement models, or evaluation metrics without modifying core code. This design ensures the tool generalizes to TRIP Lab's future simulator audio while remaining lightweight and maintainable.

Conclusion:

Till now, based on the research of information out there, the research is able to consolidate:

- Dataset analysis
- Preprocessing
- Hybrid enhancement pipeline (DSP + DL)
- Evaluation strategy for to both perceptual quality and analytic utility

Task 2 evaluation identified Multi-band Wiener as the optimal DSP pre-cleaning stage, achieving SQUIM-STOI of 0.947 vs 0.821 baseline and normalising VAD from 76.8% to 60.6%. These results establish the DSP baseline benchmark that Wave-U-Net will be directly evaluated against using the same CQI framework.

And for the enhancement, **Wave-U-Net is chosen** as the best DL enhancer given the multi-speaker, noisy team communication context.